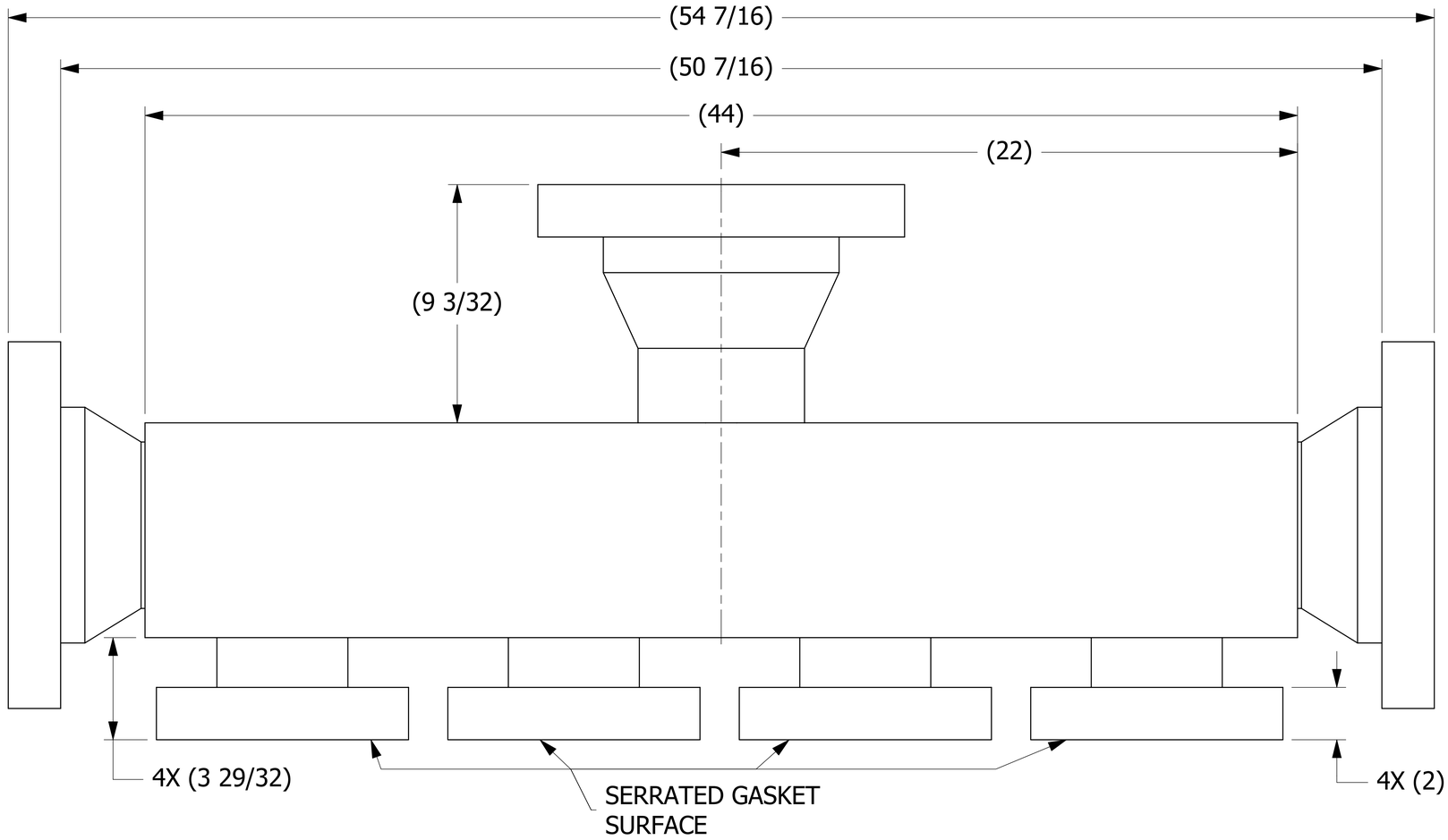

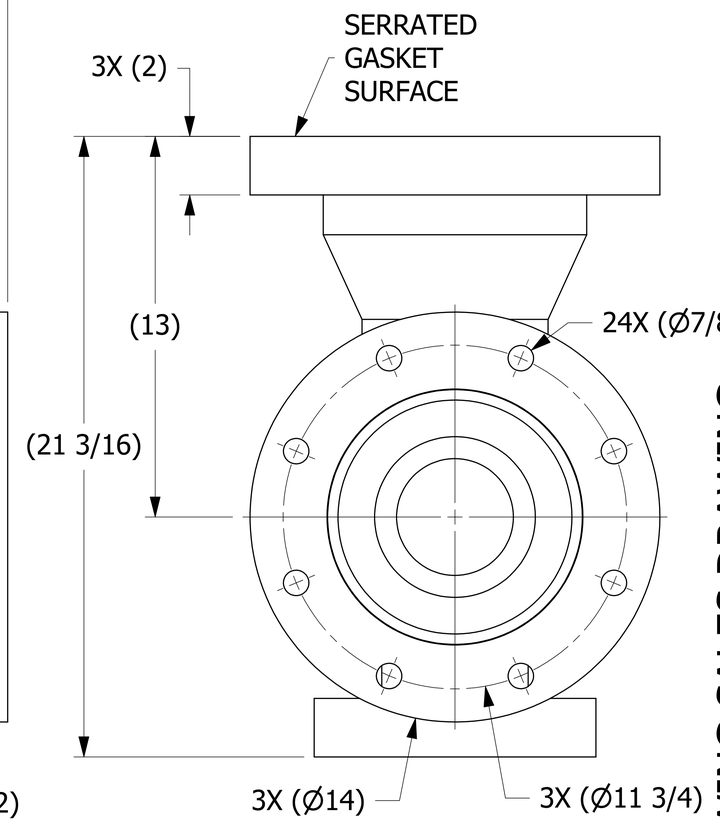

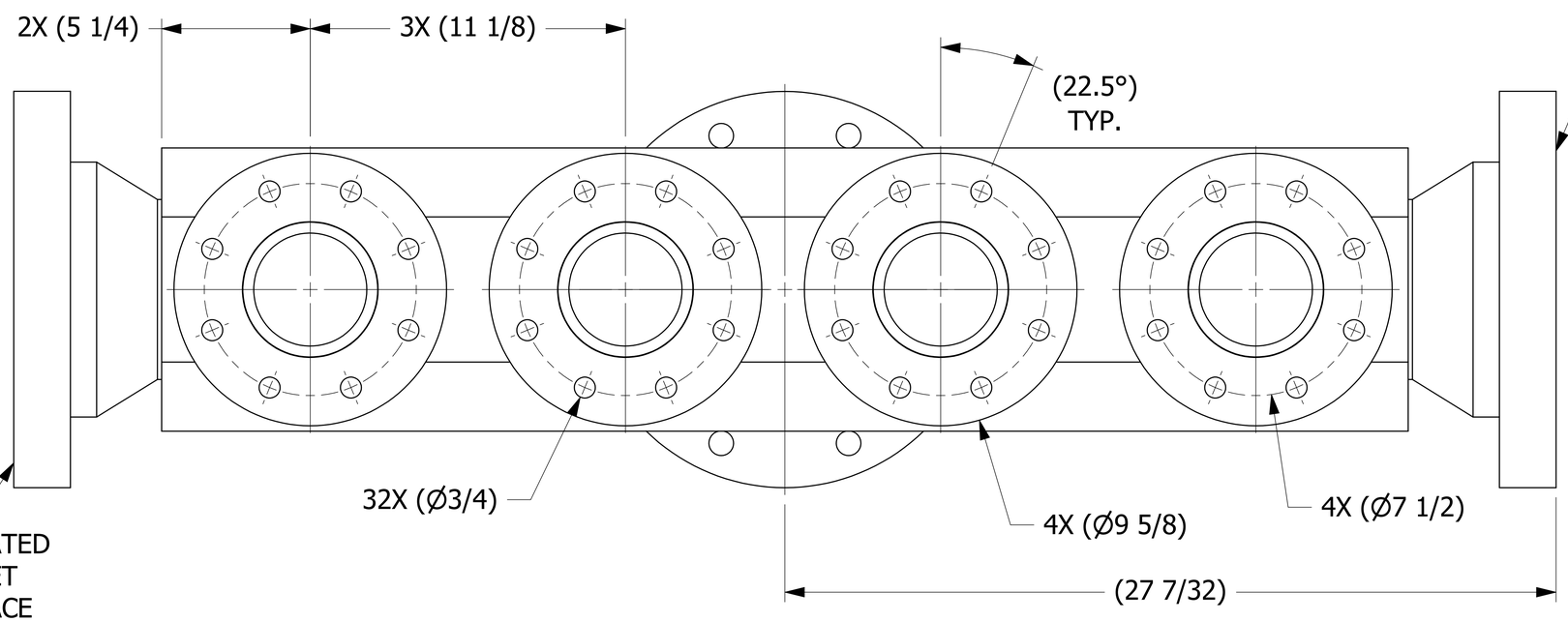

NOTES:
1. PIPE MANIFOLD HAS AN APPROXIMATE WEIGHT OF 124 LBS.
2. SOLD TO WORLEY WELDING ONLY.

REV	BY	DATE	DESCRIPTION
B	JG	11-2-15	ADDED WORLEY WELDING NOTE
A	JG	10-9-15	RELEASED FOR PRODUCTION

UNLESS OTHERWISE SPECIFIED DIMENSIONAL TOLERANCES
FRACTIONAL: ±1/16
X.XX: ±.03
X.XXX: ±.015
ANGULAR: ±1°
DEBURR ALL SHARP EDGES. ALL MACHINED SURFACES TO HAVE A 125 RMS FINISH UNLESS NOTED OTHERWISE.
THIRD ANGLE PROJECTION

DRAWN BY:	JG
CHECKED BY:	WRB
PROTOTYPE BY:	JG
PROTOTYPE DATE:	9/3/2015
APPROVED FOR PRODUCTION BY:	JRO
PRODUCTION DATE:	10/8/2015

SALCO PRODUCTS, INC.

PART NAME: PIPE MANIFOLD 8"X4"

MATERIAL: SALCO PE

PROJECT #: H150901 | SHEET #: 1 OF 2 | SCALE: 1:2

DRAWING #: E42277 | PART #: HSPM8X401

THIS PRINT, PROPERTY OF SALCO PRODUCTS INC, CONTAINS PROPRIETARY INFORMATION AND MUST NOT BE COPIED, REPRODUCED, OR USED DETRIMENTALLY TO OUR INTEREST.

SALES DRAWING SALES DRAWING
SALES DRAWING SALES DRAWING

SALES DRAWING SALES DRAWING

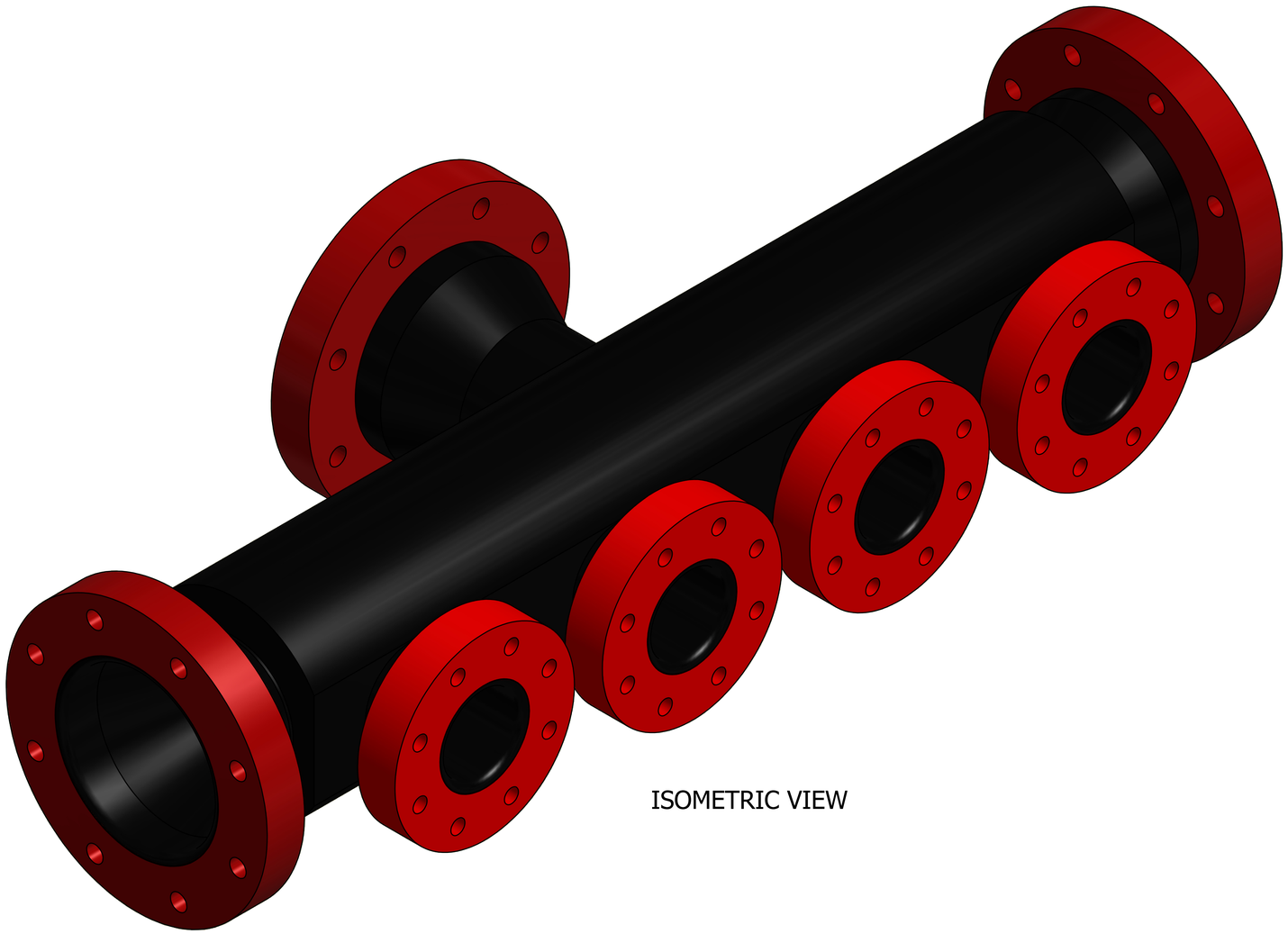

ISOMETRIC VIEW

SALES DRAWING SALES DRAWING

REV	BY	DATE	DESCRIPTION
B	JG	11-2-15	ADDED WORLEY WELDING NOTE
A	JG	10-9-15	RELEASED FOR PRODUCTION

UNLESS OTHERWISE SPECIFIED DIMENSIONAL TOLERANCES

FRACTIONAL: ±1/16

X.XX: ±.03

X.XXX: ±.015

ANGULAR: ±1°

DEBURR ALL SHARP EDGES. ALL MACHINED SURFACES TO HAVE A 125 RMS FINISH UNLESS NOTED OTHERWISE.

THIRD ANGLE PROJECTION

DRAWN BY:	JG
CHECKED BY:	WRB
PROTOTYPE BY:	JG
PROTOTYPE DATE:	9/3/2015
APPROVED FOR PRODUCTION BY:	JRO
PRODUCTION DATE:	10/8/2015

SALCO PRODUCTS, INC.

PART NAME: PIPE MANIFOLD 8"X4"

MATERIAL: SALCO PE

PROJECT #: H150901

SHEET #: 2 OF 2

SCALE: 1:2

DRAWING #: E42277

PART #: HSPM8X401

THIS PRINT, PROPERTY OF SALCO PRODUCTS INC, CONTAINS PROPRIETARY INFORMATION AND MUST NOT BE COPIED, REPRODUCED, OR USED DETRIMENTALLY TO OUR INTEREST.